| Building Control Guidance Note | Subject | Ceilings and flat roofs<br>Timber sizes and construction details | | | | | | | BCG008 |
|---|---|---|---|---|---|---|---|---|---|
| | Issued | 01/01/2001 | Rev | B | Page | 1 | of | 2 | |

The following tables give details of the allowable spans and spacing for some of the more common timber sizes used in ceiling and flat roof construction. All the figures are based on the normal loading conditions found in domestic construction In any other situation you should refer to the Approved Document to Part A of the Building Regulations or ask your Building Control Officer for advice.

**MAXIMUM CLEAR SPAN OF CEILING JOISTS IN METRES**

| Size of ceiling joist | Spacing between joists | | |
|---|---|---|---|
| | 400mm | 450mm | 600mm |
| 97 x 50 | 1.97 | 1.95 | 1.89 |
| 122 x 50 | 2.67 | 2.63 | 2.53 |
| 147 x 50 | 3.39 | 3.34 | 3.19 |
| 170 x 50 | 4.06 | 3.99 | 3.81 |
| 195 x 50 | 4.79 | 4.70 | 4.48 |
| 220 x 50 | 5.52 | 5.41 | 5.14 |

**MAXIMUM CLEAR SPANS FOR CEILING BINDERS IN METRES**

| Size of ceiling binder | Spacing between binders | | |
|---|---|---|---|
| | 1.5m | 2.1m | 2.7m |
| 175 x 50 | 2.28 | 2.07 | 1.91 |
| 200 x 50 | 2.64 | 2.39 | 2.21 |
| 150 x 75 | 2.25 | 2.05 | 1.90 |
| 175 x 75 | 2.66 | 2.42 | 2.24 |
| 200 x 75 | 3.08 | 2.79 | 2.58 |
| 225 x 75 | 3.50 | 3.16 | 2.92 |

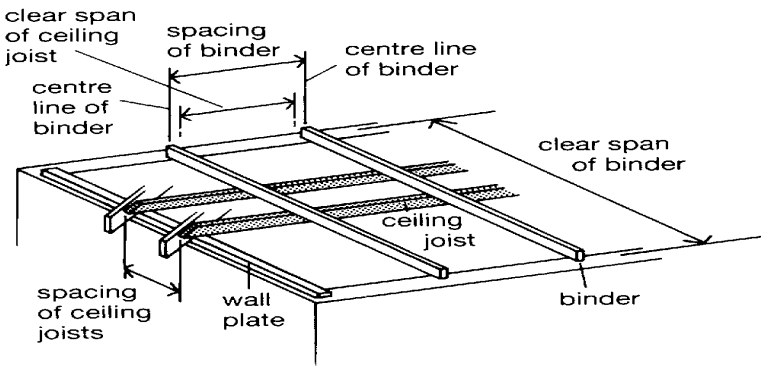


© Crown Copyright reproduced with the permission of the Controller of Her Majesty's Stationery Office. Further information can be obtained from the Building Regulations 2000 Approved Document A (1992) or from your Building Control Officer. All views expressed in this document are those of the Council and do not necessarily reflect those of the Department of the Environment, Transport and the Regions or any other Local Authority. In the event of any dispute arising, reference should be made to the relevant Statutory Document, which contains a full statement of the Law.

**CLEAR SPANS FOR FLAT ROOF JOISTS IN METRES**

| Size of roof joists | Spacing of joists | | |
|---|---|---|---|
| | 400mm | 450mm | 600mm |
| 97 x 50 | 1.89 | 1.86 | 1.78 |
| 122 x 50 | 2.53 | 2.49 | 2.37 |
| 147 x 50 | 3.19 | 3.13 | 2.97 |
| 170 x 50 | 3.81 | 3.73 | 3.47 |
| 195 x 50 | 4.48 | 4.36 | 3.97 |
| 220 x 50 | 5.09 | 4.9 | 4.47 |
| 170 x 75 | 4.44 | 4.33 | 3.96 |
| 195 x 75 | 5.13 | 4.95 | 4.53 |
| 220 x 75 | 5.76 | 5.56 | 5.09 |

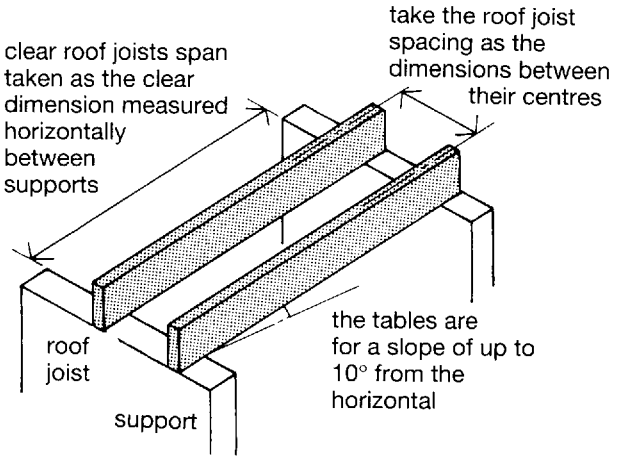


## Ventilation details for flat roofs

* Important note - as a 50mm airspace is required for ventilation purposes over a **minimum** of 100mm insulation, the minimum depth of joist required is usually taken as 150mm even if a lesser depth would be acceptable from a purely structural point of view.

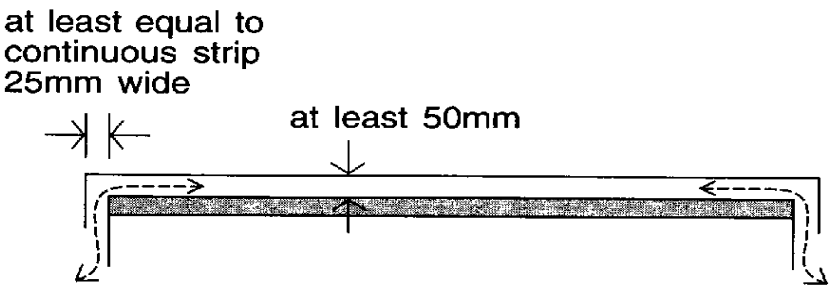


**(a) Flat roof**